THROUGH-HOLE RADIAL HIGH CURRENT POWER CHOKES FAAIRD01 SERIES

FEATURES:

High Saturation Material
Polyolefin Shrink Tubing
Low DC Resistance
High Reliability Low cost

OPTIONS:

Packaging: Tape & Reel is Standard (Qty: 1000 pcs)
Bulk packaging available for smaller quantities
Tolerance:10% is standard
tighter tolerances available.

COMMON APPLICATIONS:

Switching Regulators
RFI Suppression Filters
SCR and TRIAC Controls
Automotive Systems

STANDARD SPECIFICATIONS

Part Number	L (μH) @1KHz	DCR (Ω)Max	IDC (A Max)	Dim(Inches/mm) C Approx.	Dim(Inches/mm) D Nom.
FAAIRD01-1R0M	1.0	0.003	9	0.55/13.97	0.051/1.30
FAAIRD01-1R2M	1.2	0.003	9	0.55/13.97	0.051/1.30
FAAIRD01-1R5M	1.5	0.004	9	0.55/13.97	0.051/1.30
FAAIRD01-1R8M	1.8	0.004	9	0.55/13.97	0.051/1.30
FAAIRD01-2R2M	2.2	0.005	9	0.55/13.97	0.051/1.30
FAAIRD01-2R7M	2.7	0.005	9	0.55/13.97	0.051/1.30
FAAIRD01-3R3M	3.3	0.005	9	0.55/13.97	0.051/1.30
FAAIRD01-3R9M	3.9	0.006	9	0.55/13.97	0.051/1.30
FAAIRD01-4R7M	4.7	0.007	9	0.55/13.97	0.051/1.30
FAAIRD01-5R6M	5.6	0.007	9	0.55/13.97	0.051/1.30
FAAIRD01-6R8M	6.8	0.008	9	0.55/13.97	0.051/1.30
FAAIRD01-8R2M	8.2	0.009	9	0.55/13.97	0.051/1.30
FAAIRD01-100K	10	0.010	9	0.55/13.97	0.051/1.30
FAAIRD01-120K	12	0.011	9	0.55/13.97	0.051/1.30
FAAIRD01-150K	15	0.015	7.2	0.53/13.46	0.043/1.10
FAAIRD01-180K	18	0.016	7.2	0.53/13.46	0.043/1.10
FAAIRD01-220K	22	0.020	5.5	0.53/13.46	0.043/1.10
FAAIRD01-270K	27	0.030	4.5	0.53/13.46	0.039/1.00
FAAIRD01-330K	33	0.040	4.0	0.53/13.46	0.039/1.00
FAAIRD01-390K	39	0.046	4.0	0.53/13.46	0.039/1.00
FAAIRD01-470K	47	0.062	2.8	0.53/13.46	0.035/0.90
FAAIRD01-560K	56	0.069	2.8	0.53/13.46	0.035/0.90
FAAIRD01-680K	68	0.077	2.8	0.50/12.70	0.032/0.80
FAAIRD01-820K	82	0.083	2.8	0.50/12.70	0.032/0.80
FAAIRD01-101K	100	0.095	2.8	0.50/12.70	0.032/0.80
FAAIRD01-121K	120	0.127	2.0	0.50/12.70	0.030/0.75
FAAIRD01-151K	150	0.181	1.6	0.50/12.70	0.030/0.75
FAAIRD01-181K	180	0.217	1.6	0.50/12.70	0.025/0.63
FAAIRD01-221K	220	0.240	1.6	0.50/12.70	0.025/0.63
FAAIRD01-271K	270	0.300	1.6	0.47/11.94	0.020/0.50
FAAIRD01-331K	330	0.336	1.3	0.47/11.94	0.020/0.50
FAAIRD01-391K	390	0.460	1.0	0.47/11.94	0.020/0.50
FAAIRD01-471K	470	0.636	0.8	0.47/11.94	0.020/0.50
FAAIRD01-561K	560	0.696	0.8	0.47/11.94	0.020/0.50

Note:1. K=±10%,M=±20%

PHYSICAL CHARACTERISTICS

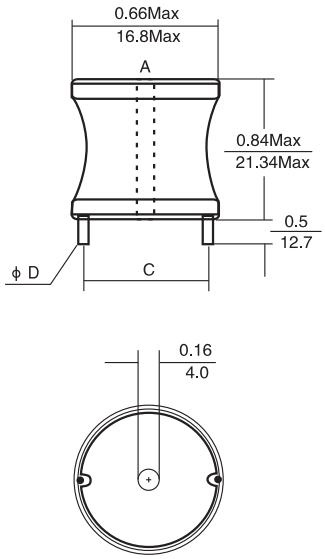

DIMENSIONS: INCHES / mm

ELECTRONICAL SCHEMATIC

TECHNICAL INFORMATION

Inductance Testing: ,HP4284A,HP4285A or equivalent
RDC:QuadTech 1880 Milliohmmeter
Q- HP4342A
SRF-HP4191A or HP4194A
Rated Current L value drop10%typ.at IDC against its initial value
Temperature rise 40 ℃ Max Reference ambient temperature
Solderability: 75% of the lead wire shall be covered
Soldering Methods: Wave,Reflow
Operating Temperature:-25℃ to +85℃
Storage Temperature: -55℃ to +125℃
Terminal bending strength:24.5N Min
Moisture resistance:△L/L≤±10% △Q/Q≤±25%

Note: All specifications subject to change without notice.

THROUGH-HOLE RADIAL HIGH CURRENT POWER CHOKES FAAIRD02 SERIES

FEATURES:

High Saturation Material
Polyolefin Shrink Tubing
Low DC Resistance
High Reliability Low cost

OPTIONS:

Packaging: Tape & Reel is Standard (Qty: 1000 pcs)
Bulk packaging available for smaller quantities
Tolerance:10% is standard
tighter tolerances available.

COMMON APPLICATIONS:

Switching Regulators
RFI Suppression Filters
SCR and TRIAC Controls
Automotive Systems

PHYSICAL CHARACTERISTICS

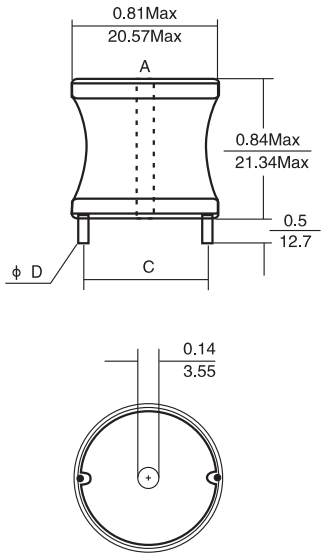

DIMENSIONS: INCHES / mm

ELECTRONICAL SCHEMATIC

TECHNICAL INFORMATION

Inductance Testing: ,HP4284A,HP4285A or equivalent
RDC:QuadTech 1880 Milliohmmeter
Q- HP4342A
SRF-HP4191A or HP4194A
Rated Current L value drop10%typ.at IDC against its initial value
Temperature rise 40℃ Max Reference ambient temperatu
Solderability: 75% of the lead wire shall be covere
Soldering Methods: Wave,Reflow
Operating Temperature:-25℃ to +85℃
Storage Temperature: -55℃ to +125℃
Terminal bending strength:24.5N Min
Moisture resistance:△L/L≤±10% △Q/Q≤±25%

Note: All specifications subject to change without notice.

STANDARD SPECIFICATIONS

Part Number	L (μH) @1KHz	DCR (Ω Max)	IDC (A Max)	Dim(Inches/mm) C Approx.	Dim(Inches/mm) D Nom.
FAAIRD02-1R0M	1.0	0.003	11.4	0.63/16.00	0.071/1.80
FAAIRD02-1R2M	1.2	0.003	11.4	0.63/16.00	0.071/1.80
FAAIRD02-1R5M	1.5	0.003	11.4	0.63/16.00	0.071/1.80
FAAIRD02-1R8M	1.8	0.003	11.4	0.63/16.00	0.071/1.80
FAAIRD02-2R2M	2.2	0.004	11.4	0.63/16.00	0.071/1.80
FAAIRD02-2R7M	2.7	0.005	11.4	0.63/16.00	0.063/1.60
FAAIRD02-3R3M	3.3	0.005	11.4	0.63/16.00	0.063/1.60
FAAIRD02-3R9M	3.9	0.005	11.4	0.63/16.00	0.063/1.60
FAAIRD02-4R7M	4.7	0.005	11.4	0.63/16.00	0.063/1.60
FAAIRD02-5R6M	5.6	0.006	11.4	0.63/16.00	0.063/1.60
FAAIRD02-6R8M	6.8	0.007	11.4	0.63/16.00	0.063/1.60
FAAIRD02-8R2M	8.2	0.007	11.4	0.63/16.00	0.063/1.60
FAAIRD02-100K	10	0.009	11.4	0.63/16.00	0.063/1.60
FAAIRD02-120K	12	0.009	11.4	0.63/16.00	0.055/1.40
FAAIRD02-150K	15	0.013	9.0	0.63/16.00	0.055/1.40
FAAIRD02-180K	18	0.018	7.2	0.63/16.00	0.051/1.30
FAAIRD02-220K	22	0.019	7.2	0.63/16.00	0.051/1.30
FAAIRD02-270K	27	0.026	5.5	0.63/16.00	0.051/1.30
FAAIRD02-330K	33	0.029	5.5	0.60/15.24	0.043/1.10
FAAIRD02-390K	39	0.030	5.5	0.60/15.24	0.043/1.10
FAAIRD02-470K	47	0.035	5.5	0.62/15.74	0.043/1.10
FAAIRD02-560K	56	0.039	5.5	0.62/15.74	0.039/1.00
FAAIRD02-680K	68	0.053	4.8	0.62/15.74	0.039/1.00
FAAIRD02-820K	82	0.060	4.8	0.62/15.74	0.039/1.00
FAAIRD02-101K	100	0.080	4.0	0.62/15.74	0.035/0.90
FAAIRD02-121K	120	0.090	4.0	0.62/15.74	0.035/0.90
FAAIRD02-151K	150	0.098	4.0	0.62/15.74	0.032/0.80
FAAIRD02-181K	180	0.110	4.0	0.62/15.74	0.032/0.80
FAAIRD02-221K	220	0.150	2.8	0.62/15.74	0.032/0.80
FAAIRD02-271K	270	0.213	2.0	0.60/15.24	0.030/0.75
FAAIRD02-331K	330	0.305	1.6	0.60/15.24	0.030/0.75
FAAIRD02-391K	390	0.320	1.6	0.60/15.24	0.026/0.65
FAAIRD02-471K	470	0.355	1.6	0.60/15.24	0.026/0.65
FAAIRD02-561K	560	0.388	1.6	0.60/15.24	0.026/0.65
FAAIRD02-681K	680	0.430	1.6	0.60/15.24	0.026/0.65
FAAIRD02-821K	820	0.590	1.3	0.60/15.24	0.024/0.60
FAAIRD02-102K	1000	0.818	1.0	0.60/15.24	0.020/0.50
FAAIRD02-122K	1200	1.14	0.8	0.60/15.24	0.020/0.50
FAAIRD02-152K	1500	1.26	0.8	0.60/15.24	0.020/0.50
FAAIRD02-182K	1800	1.39	0.8	0.60/15.24	0.018/0.45
FAAIRD02-222K	2200	1.54	0.8	0.60/15.24	0.018/0.45

Note:1. K=±10%,M=±20%

THROUGH-HOLE RADIAL HIGH CURRENT POWER CHOKES FAAIRD03 SERIES

FEATURES:

High Saturation Material
Polyo efin Shrink Tubing
Low DC Resistance
High Reliability Low cost

OPTIONS:

Packaging: Tape & Reel is Standard (Qty: 1000 pcs)
Bulk packaging available for smaller quantities
Tolerance:10% is standard
tighter tolerances available.

COMMON APPLICATIONS:

Switching Regulators
RFI Suppression Filters
SCR and TRIAC Controls
Automotive Systems

STANDARD SPECIFICATIONS

Part Number	L (μH) @1KHz	DCR (Ω Max)	IDC (A Max)	Dim(Inches/mm) C Approx.	Dim(Inches/mm) ØD Nom.
FAAIRD03-1R0M	1.0	0.003	21	0.80/20.32	0.079/2.00
FAAIRD03-1R2M	1.2	0.003	21	0.80/20.32	0.079/2.00
FAAIRD03-1R5M	1.5	0.003	21	0.80/20.32	0.079/2.00
FAAIRD03-1R8M	1.8	0.003	21	0.80/20.32	0.079/2.00
FAAIRD03-2R2M	2.2	0.003	21	0.80/20.32	0.079/2.00
FAAIRD03-2R7M	2.7	0.003	21	0.80/20.32	0.079/2.00
FAAIRD03-3R3M	3.3	0.003	21	0.80/20.32	0.079/2.00
FAAIRD03-3R9M	3.9	0.003	21	0.80/20.32	0.079/2.00
FAAIRD03-4R7M	4.7	0.003	21	0.80/20.32	0.079/2.00
FAAIRD03-5R6M	5.6	0.003	21	0.82/20.82	0.079/2.00
FAAIRD03-6R8M	6.8	0.004	21	0.82/20.82	0.079/2.00
FAAIRD03-8R2M	8.2	0.004	21	0.82/20.82	0.079/2.00
FAAIRD03-100K	10	0.006	17	0.82/20.82	0.079/2.00
FAAIRD03-120K	12	0.008	13.5	0.80/20.32	0.071/1.80
FAAIRD03-150K	15	0.009	13.5	0.80/20.32	0.071/1.80
FAAIRD03-180K	18	0.010	13.5	0.80/20.32	0.071/1.80
FAAIRD03-220K	22	0.011	13.5	0.79/20.06	0.063/1.60
FAAIRD03-270K	27	0.012	13.5	0.79/20.06	0.063/1.60
FAAIRD03-330K	33	0.017	13.5	0.79/20.06	0.063/1.60
FAAIRD03-390K	39	0.022	11.4	0.79/20.06	0.055/1.40
FAAIRD03-470K	47	0.024	9.0	0.79/20.06	0.055/1.40
FAAIRD03-560K	56	0.026	9.0	0.79/20.06	0.055/1.40
FAAIRD03-680K	68	0.029	9.0	0.79/20.06	0.055/1.40
FAAIRD03-820K	82	0.032	9.0	0.79/20.06	0.055/1.40
FAAIRD03-101K	100	0.034	9.0	0.79/20.06	0.055/1.40
FAAIRD03-121K	120	0.046	7.2	0.79/20.06	0.055/1.40
FAAIRD03-151K	150	0.064	5.5	0.77/19.56	0.043/1.10
FAAIRD03-181K	180	0.072	5.5	0.77/19.56	0.043/1.10
FAAIRD03-221K	220	0.080	5.5	0.77/19.56	0.039/1.00
FAAIRD03-271K	270	0.110	4.5	0.77/19.56	0.039/1.00
FAAIRD03-331K	330	0.122	4.5	0.77/19.56	0.039/1.00
FAAIRD03-391K	390	0.169	4.0	0.77/19.56	0.035/0.90
FAAIRD03-471K	470	0.187	4.0	0.77/19.56	0.035/0.90
FAAIRD03-561K	560	0.205	4.0	0.77/19.56	0.031/0.80
FAAIRD03-681K	680	0.256	2.8	0.77/19.56	0.031/0.80
FAAIRD03-821K	820	0.288	2.8	0.77/19.56	0.031/0.80
FAAIRD03-102K	1000	0.426	2.0	0.75/19.05	0.030/0.75
FAAIRD03-122K	1200	0.426	2.0	0.75/19.05	0.030/0.75
FAAIRD03-152K	1500	0.518	2.0	0.75/19.05	0.026/0.65
FAAIRD03-182K	1800	0.705	16	0.75/19.05	0.026/0.65
FAAIRD03-222K	2200	1.02	1.3	0.75/19.05	0.026/0.65
FAAIRD03-272K	2700	1.14	1.3	0.75/19.05	0.022/0.57
FAAIRD03-332K	3300	1.27	1.3	0.75/19.05	0.020/0.50
FAAIRD03-392K	3900	1.67	1.0	0.75/19.05	0.020/0.50
FAAIRD03-472K	4700	1.86	1.0	0.75/19.05	0.020/0.50

Note:1. K=±10%,M=±20%

PHYSICAL CHARACTERISTICS

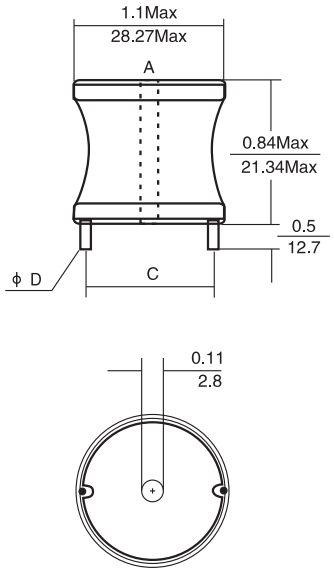

DIMENSIONS: INCHES / mm

ELECTRONICAL SCHEMATIC

TECHNICAL INFORMATION

Inductance Testing: ,HP4284A,HP4285A or equivalent
RDC:QuadTech 1880 Milliohmmeter
Q- HP4342A
SRF-HP4191A or HP4194A
Rated Current L value drop10%typ.at DC against its initial value
Temperature rise 40℃ Max Reference ambient temperatu
Solderability: 75% of the lead wire shall be covere
Soldering Methods: Wave,Reflow
Operating Temperature:-25℃ to +85℃
Storage Temperature: -55℃ to +125℃
Terminal bending strength:24.5N Min
Moisture resistance:△L/L≤±10% △Q/Q≤±25%

Note: All specifications subject to change without notice.

THROUGH-HOLE RADIAL HIGH CURRENT POWER CHOKES FAAIRD04 SERIES

FEATURES:

High Saturation Material
Polyolefin Shrink Tubing
Low DC Resistance
High Reliability Low cost

OPTIONS:

Packaging: Tape & Reel is Standard (Qty: 1000 pcs)
Bulk packaging available for smaller quantities
Tolerance:10% is standard
tighter tolerances available.

COMMON APPLICATIONS:

Switching Regulators
RFI Suppression Filters
SCR and TRIAC Controls
Automotive Systems

PHYSICAL CHARACTERISTICS

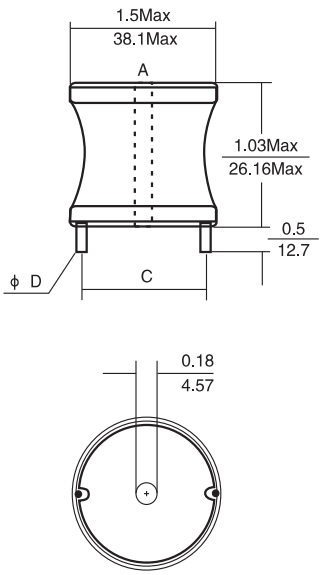

DIMENSIONS: INCHES / mm

ELECTRONICAL SCHEMATIC

TECHNICAL INFORMATION

Inductance Testing: HP4284A,HP4285A or equivalent
RDC:QuadTech 1880 Milliohmmeter
Q- HP4342A
SRF-HP4191A or HP4194A
Rated Current L value drop10%typ.atIDC against its initial value
Temperature rise 40℃ Max Reference ambient temperature
Solderability: 75% of the lead wire shall be covered
Soldering Methods: Wave,Reflow
Operating Temperature:-25℃ to +85℃
Storage Temperature: -55℃ to +125℃
Terminal bending strength:24.5N Min
Moisture resistance:△L/L≤±10% △Q/Q≤±25%

Note: All specifications subject to change without notice.

STANDARD SPECIFICATIONS

Part Number	L (μH) @1KHz	DCR (Ω Max)	IDC (A Max)	Dim(Inches/mm) C Approx.	Dim(Inches/mm) D Nom.
FAAIRD04-1R8M	1.8	0.002	27	1.11/28.19	0.0791/2.00
FAAIRD04-2R2M	2.2	0.002	27	1.11/28.19	0.0791/2.00
FAAIRD04-2R7M	2.7	0.003	27	1.11/28.19	0.0791/2.00
FAAIRD04-3R3M	3.3	0.003	27	1.11/28.19	0.0791/2.00
FAAIRD04-3R9M	3.9	0.003	27	1.11/28.19	0.0791/2.00
FAAIRD04-4R7M	4.7	0.003	27	1.11/28.19	0.0791/2.00
FAAIRD04-5R6M	5.6	0.004	27	1.11/28.19	0.0791/2.00
FAAIRD04-6R8M	6.8	0.004	27	1.15/29.21	0.0791/2.00
FAAIRD04-8R2M	8.2	0.004	27	1.15/29.21	0.0791/2.00
FAAIRD04-100K	10	0.005	27	1.15/29.21	0.0791/2.00
FAAIRD04-120K	12	0.005	27	1.15/29.21	0.0791/2.00
FAAIRD04-150K	15	0.006	27	1.15/29.21	0.0791/2.00
FAAIRD04-180K	18	0.008	27	1.15/29.21	0.0791/2.00
FAAIRD04-220K	22	0.009	21	1.15/29.21	0.0791/2.00
FAAIRD04-270K	27	0.010	21	1.15/29.21	0.0791/2.00
FAAIRD04-330K	33	0.011	21	1.15/29.21	0.071/1.80
FAAIRD04-390K	39	0.012	21	1.15/29.21	0.071/1.80
FAAIRD04-470K	47	0.018	14.4	1.15/29.21	0.071/1.80
FAAIRD04-560K	56	0.019	14.4	1.15/29.21	0.063/1.60
FAAIRD04-680K	68	0.021	14.4	1.15/29.21	0.063/1.60
FAAIRD04-820K	82	0.023	14.4	1.15/29.21	0.063/1.60
FAAIRD04-101K	100	0.025	14.4	1.15/29.21	0.063/1.60
FAAIRD04-121K	120	0.028	14.4	1.15/29.21	0.055/1.40
FAAIRD04-151K	150	0.040	14.4	1.15/29.21	0.055/1.40
FAAIRD04-181K	180	0.045	14.4	1.15/29.21	0.055/1.40
FAAIRD04-221K	220	0.050	14.4	1.15/29.21	0.055/1.40
FAAIRD04-271K	270	0.056	14.4	1.15/29.21	0.055/1.40
FAAIRD04-331K	330	0.074	14.4	1.15/29.21	0.055/1.40
FAAIRD04-391K	390	0.082	9.0	1.15/29.21	0.043/1.10
FAAIRD04-471K	470	0.114	7.2	1.15/29.21	0.043/1.10
FAAIRD04-561K	560	0.125	7.2	1.15/29.21	0.039/1.00
FAAIRD04-681K	680	0.139	7.2	1.15/29.21	0.039/1.00
FAAIRD04-821K	820	0.154	7.2	1.15/29.21	0.039/1.00
FAAIRD04-102K	1000	0.216	5.5	1.15/29.21	0.039/1.00
FAAIRD04-122K	1200	0.232	5.5	1.14/28.95	0.035/0.90
FAAIRD04-152K	1500	0.324	4.5	1.14/28.95	0.035/0.90
FAAIRD04-182K	1800	0.360	4.5	1.14/28.95	0.035/0.90
FAAIRD04-222K	2200	0.494	4.0	1.10/27.94	0.031/0.80
FAAIRD04-272K	2700	0.555	4.0	1.12/28.44	0.031/0.80
FAAIRD04-332K	3300	0.773	2.8	1.10/27.94	0.030/0.75
FAAIRD04-392K	3900	0.845	2.8	1.10/27.94	0.030/0.75
FAAIRD04-472K	4700	1.14	2.0	1.12/28.44	0.030/0.75
FAAIRD04-562K	5600	1.60	2.0	1.09/27.68	0.026/0.65
FAAIRD04-682K	6800	1.76	1.6	1.12/28.44	0.026/0.65
FAAIRD04-822K	8200	1.95	1.6	1.09/27.68	0.022/0.57
FAAIRD04-103K	10000	2.76	1.3	1.11/28.19	0.022/0.57
FAAIRD04-123K	12000	3.04	1.3	1.08/27.43	0.020/0.50
FAAIRD04-153K	15000	3.39	1.3	1.10/27.94	0.020/0.50

Note:1. K=±10%,M=±20%

RADIAL LEADED POWER LINE CHOKES FAAIRD05 SERIES

FEATURES:

High Saturation Material
Polyolefin Shrink Tubing
Low DC Resistance
High Reliability Low cost

OPTIONS:

Packaging: Tape & Reel is Standard (Qty: 1000 pcs)
Bulk packaging available for smaller quantities
Tolerance:10% is standard
tighter tolerances available.

COMMON APPLICATIONS:

Switching Regulators
RFI Suppression Filters
Power Amplifiers
Power Supplies
SCR and Trica Controls
Speaker Crossover Networks
Automotive Systems
Filters

PHYSICAL CHARACTERISTICS

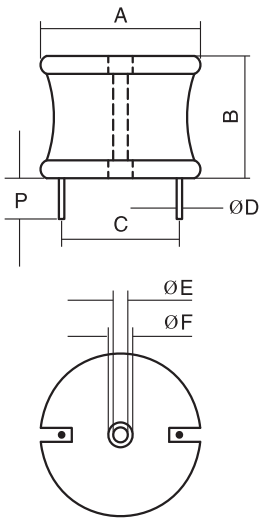

DIMENSIONS: inches/mm

A	B	P(min)	ØE	ØF
1.60/40.64	1.45/36.83	0.50/127	0.10/2.54	0.25/6.35

ELECTRONICAL SCHEMATIC

TECHNICAL INFORMATION

The AIRD-05,06,07,08 Series of Power Line Choke is available in 367 standard values covering a wide rang of inductance and current. The use of high saturation flux density material make these coils ideal for use in switching regulated power supply applications and wherever high current choke values in a small physical size are needed.
Inductance Testing: ,HP4284A,HP4285A or equivalent
RDC:QuadTech 1880 Milliohmmeter
Rated Current L value drop10%typ.atIDC against its initial value
Temperature rise 40℃ Max Reference ambient temperature
Solderability: 75% of the lead wire shall be covered
Soldering Methods: Wave,Reflow
Operating Temperature:-25℃ to +85℃
Storage Temperature: -55℃ to +125℃
Terminal bending strength:24.5N Min
Moisture resistance:△L/L≤±10%

Note: All specifications subject to change without notice.

STANDARD SPECIFICATIONS

Part Number	L (μH) @1KHz	DCR (Ω Max)	IDC (A Max)	Dim C (Inches/mm) Approx.	Dim ØD (Inches/mm) Nom.
FAAIRD05-1R8M	1.8	0.002	35.0	1.11/28.194	0.102/2.60
FAAIRD05-2R2M	2.2	0.002	35.0	1.11/28.194	0.102/2.60
FAAIRD05-2R7M	2.7	0.002	35.0	1.11/28.194	0.102/2.60
FAAIRD05-3R3M	3.3	0.002	35.0	1.11/28.194	0.102/2.60
FAAIRD05-3R9M	3.9	0.003	35.0	1.11/28.194	0.102/2.60
FAAIRD05-4R7M	4.7	0.003	35.0	1.11/28.194	0.102/2.60
FAAIRD05-5R6M	5.6	0.003	35.0	1.11/28.194	0.102/2.60
FAAIRD05-6R8M	6.8	0.003	35.0	1.11/28.194	0.102/2.60
FAAIRD05-8R2M	8.2	0.003	35.0	1.11/28.194	0.102/2.60
FAAIRD05-100k	10.0	0.004	35.0	1.11/28.194	0.102/2.60
FAAIRD05-120K	12.0	0.004	35.0	1.16/29.464	0.102/2.60
FAAIRD05-150K	15.0	0.005	35.0	1.16/29.464	0.102/2.60
FAAIRD05-180K	18.0	0.007	27.0	1.16/29.464	0.094/2.40
FAAIRD05-220K	22.0	0.007	27.0	1.16/29.464	0.094/2.40
FAAIRD05-270K	27.0	0.008	27.0	1.16/29.464	0.094/2.40
FAAIRD05-330K	33.0	0.009	27.0	1.16/29.464	0.094/2.40
FAAIRD05-390K	39.0	0.010	27.0	1.16/29.464	0.094/2.40
FAAIRD05-470K	47.0	0.011	27.0	1.16/29.464	0.094/2.40
FAAIRD05-560K	56.0	0.013	21.0	1.16/29.464	0.094/2.40
FAAIRD05-680K	68.0	0.015	21.0	1.25/31.750	0.83/2.10
FAAIRD05-820K	82.0	0.017	21.0	1.28/32.512	0.84/2.10
FAAIRD05-101K	100.0	0.018	21.0	1.25/31.750	0.84/2.10
FAAIRD05-121K	120.0	0.022	17.0	1.16/29.464	0.075/1.90
FAAIRD05-151K	150.0	0.025	17.0	1.16/29.464	0.075/1.90
FAAIRD05-181K	180.0	0.035	13.5	1.10/27.94	0.067/1.70
FAAIRD05-221K	220.0	0.040	13.5	1.10/27.94	0.067/1.70
FAAIRD05-271K	270.0	0.044	13.5	1.10/27.94	0.067/1.70
FAAIRD05-331K	330.0	0.049	13.5	1.11/28.194	0.067/1.70
FAAIRD05-390K	390.0	0.070	11.4	1.15/29.21	0.059/1.50
FAAIRD05-471K	470.0	0.078	11.4	1.07/27.178	0.059/1.50
FAAIRD05-561K	560.0	0.105	9.0	1.07/27.178	0.055/1.40
FAAIRD05-681K	680.0	0.115	9.0	1.07/27.178	0.055/1.40
FAAIRD05-820K	820.0	0.127	9.0	1.12/28.448	0.055/1.40
FAAIRD05-102K	1000.0	0.176	7.2	1.12/28.448	0.047/1.20
FAAIRD05-122K	1200.0	0.195	7.2	1.12/28.448	0.047/1.20
FAAIRD05-152K	1500.0	0.274	5.5	1.12/28.448	0.043/1.10
FAAIRD05-182K	1800.0	0.302	5.5	1.13/28.702	0.043/1.10
FAAIRD05-222K	2200.0	0.338	5.5	1.16/29.464	0.043/1.10
FAAIRD05-272K	2700.0	0.459	4.5	1.02/25.908	0.039/1.00
FAAIRD05-332K	3300.0	0.642	4.0	1.02/25.908	0.035/0.90
FAAIRD05-392K	3900.0	0.699	4.0	1.14/28.956	0.035/0.90
FAAIRD05-472K	4700.0	0.775	4.0	1.14/28.956	0.035/0.90
FAAIRD05-562K	5600.0	0.843	4.0	1.14/28.956	0.035/0.90
FAAIRD05-682K	6800.0	1.15	2.8	1.06/26.924	0.031/0.80
FAAIRD05-822K	8200.0	1.26	2.8	1.16/29.464	0.031/0.80
FAAIRD05-103K	10000.0	1.74	2.0	1.13/28.702	0.028/0.70
FAAIRD05-123K	12000.0	1.92	2.0	1.13/28.702	0.028/0.70
FAAIRD05-153K	15000.0	2.17	2.0	1.13/28.702	0.028/0.70

Note:1. K=±10%,M=±20%

RADIAL LEADED POWER LINE CHOKES FAAIRD06 SERIES

FEATURES:

High Saturation Material
Polyolefin Shrink Tubing
Low DC Resistance
High Reliability Low cost

OPTIONS:

Packaging: Tape & Reel is Standard (Qty: 1000 pcs)
Bulk packaging available for smaller quantities
Tolerance:10% is standard tighter tolerances available.

COMMON APPLICATIONS:

Switching Regulators
RFI Suppression Filters
Power Amplifiers
Power Supplies
SCR and Trica Controls
Speaker Crossover Networks
Automotive Systems
Filters

PHYSICAL CHARACTERISTICS

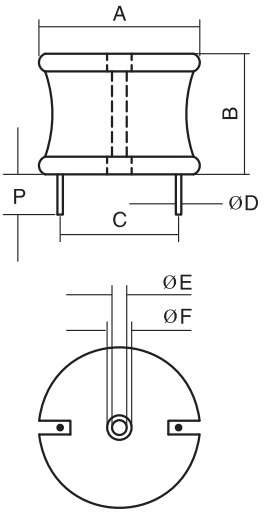

DIMENSIONS: inches/mm

A	B	P(min)	ØE	ØF
2.00/50.80	1.50/38.10	0.50/1270	0.10/2.54	0.25/6.35

ELECTRONICAL SCHEMATIC

TECHNICAL INFORMATION

The AIRD-05,06,07,08 Series of Power Line Choke is available in 367 standard values covering a wide rang of inductance and current. The use of high saturation flux density material make these coils ideal for use in switching regulated power supply applications and wherever high current choke values in a small physical size are needed.
Inductance Testing: ,HP4284A,HP4285A or equivalent
RDC:QuadTech 1880 Milliohmmeter
Rated Current L value drop10%typ.at DC against its initial value
Temperature rise 40℃ Max Reference ambient temperature
Solderability: 75% of the lead wire shall be covered
Soldering Methods: Wave,Reflow
Operating Temperature:-25℃ to +85℃
Storage Temperature: -55℃ to +125℃
Terminal bending strength:24.5N Min
Moisture resistance:△L/L≤±10%

Note: All specifications subject to change without notice.

STANDARD SPECIFICATIONS

Part Number	L (μH) @1KHz	DCR (Ω Max)	IDC (A Max)	Dim C (Inches/mm) Approx.	Dim ØD (Inches/mm) Nom.
FAAIRD06-4R7M	4.7	0.002	35.0	1.40/35.56	0.102/2.60
FAAIRD06-5R6M	5.6	0.002	35.0	1.40/35.56	0.102/2.60
FAAIRD06-6R8M	6.8	0.003	35.0	1.40/35.56	0.102/2.60
FAAIRD06-8R2M	8.2	0.003	35.0	1.40/35.56	0.102/2.60
FAAIRD06-100k	10.0	0.003	35.0	1.48/37.592	0.102/2.60
FAAIRD06-120K	12.0	0.004	35.0	1.48/37.592	0.102/2.60
FAAIRD06-150K	15.0	0.004	35.0	1.48/37.592	0.102/2.60
FAAIRD06-180K	18.0	0.005	35.0	1.48/37.592	0.102/2.60
FAAIRD06-220K	22.0	0.006	35.0	1.48/37.592	0.102/2.60
FAAIRD06-270K	27.0	0.006	35.0	1.48/37.592	0.102/2.60
FAAIRD06-330K	33.0	0.006	35.0	1.48/37.592	0.102/2.60
FAAIRD06-390K	39.0	0.008	35.0	1.48/37.592	0.102/2.60
FAAIRD06-470K	47.0	0.008	35.0	1.48/37.592	0.102/2.60
FAAIRD06-560K	56.0	0.009	35.0	1.48/37.592	0.102/2.60
FAAIRD06-680K	68.0	0.009	35.0	1.48/37.592	0.102/2.60
FAAIRD06-820K	82.0	0.010	35.0	1.48/37.592	0.102/2.60
FAAIRD06-101K	100.0	0.014	27.0	1.53/38.862	0.094/2.40
FAAIRD06-121K	120.0	0.015	27.0	1.53/38.862	0.094/2.40
FAAIRD06-151K	150.0	0.023	21.0	1.49/37.846	0.083/2.10
FAAIRD06-181K	180.0	0.025	21.0	1.49/37.846	0.083/2.10
FAAIRD06-221K	220.0	0.028	21.0	1.49/37.846	0.083/2.10
FAAIRD06-271K	270.0	0.030	21.0	1.49/37.846	0.083/2.10
FAAIRD06-331K	330.0	0.040	17.0	1.31/33.274	0.075/1.90
FAAIRD06-390K	390.0	0.055	13.5	1.31/33.274	0.067/1.70
FAAIRD06-471K	470.0	0.061	13.5	1.31/33.274	0.067/1.70
FAAIRD06-561K	560.0	0.068	13.5	1.40/35.560	0.067/1.70
FAAIRD06-681K	680.0	0.094	11.4	1.42/36.068	0.059/1.50
FAAIRD06-820K	820.0	0.104	11.4	1.42/36.068	0.059/1.50
FAAIRD06-102K	1000.0	0.143	9.0	1.36/34.544	0.055/1.40
FAAIRD06-122K	1200.0	0.156	9.0	1.36/34.544	0.055/1.40
FAAIRD06-152K	1500.0	0.219	7.2	1.31/33.274	0.047/1.20
FAAIRD06-182K	1800.0	0.241	7.2	1.31/33.274	0.047/1.20
FAAIRD06-222K	2200.0	0.270	7.2	1.40/35.560	0.047/1.20
FAAIRD06-272K	2700.0	0.364	5.5	1.36/34.544	0.043/1.10
FAAIRD06-332K	3300.0	0.498	4.5	1.24/31.496	0.039/1.00
FAAIRD06-392K	3900.0	0.548	4.5	1.32/33.528	0.039/1.00
FAAIRD06-472K	4700.0	0.608	4.5	1.32/33.528	0.039/1.00
FAAIRD06-562K	5600.0	0.671	4.5	1.36/34.544	0.039/1.00
FAAIRD06-682K	6800.0	0.750	4.5	1.40/35.560	0.039/1.00
FAAIRD06-822K	8200.0	1.030	4.0	1.45/36.830	0.035/0.90
FAAIRD06-103K	10000.0	1.160	4.0	1.45/36.830	0.035/0.90
FAAIRD06-123K	12000.0	1.540	2.8	1.40/35.560	0.031/0.80
FAAIRD06-153K	15000.0	1.750	2.8	1.40/35.560	0.028/0.70
FAAIRD06-183K	18000.0	1.940	2.8	1.45/36.830	0.028/0.70
FAAIRD06-223K	22000.0	2.740	2.0	1.37/34.798	0.028/0.70
FAAIRD06-273K	27000.0	3.710	1.7	1.37/34.798	0.025/0.63
FAAIRD06-333K	33000.0	4.160	1.7	1.37/34.798	0.025/0.63
FAAIRD06-393K	39000.0	5.560	1.4	1.35/34.290	0.025/0.63
FAAIRD06-473K	47000.0	6.190	1.4	1.35/34.290	0.022/0.55

Note:1. K=±10%,M=±20%

RADIAL LEADED POWER LINE CHOKES FAAIRD07 SERIES

FEATURES:

High Saturation Material
Polyolefin Shrink Tubing
Low DC Resistance
High Reliability Low cost

OPTIONS:

Packaging: Tape & Reel is Standard (Qty: 1000 pcs)
Bulk packaging available for smaller quantities
Tolerance:10% is standard
tighter tolerances available.

COMMON APPLICATIONS:

Switching Regulators
RFI Suppression Filters
Power Amplifiers
Power Supplies
SCR and Trica Controls
Speaker Crossover Networks
Automotive Systems
Filters

PHYSICAL CHARACTERISTICS

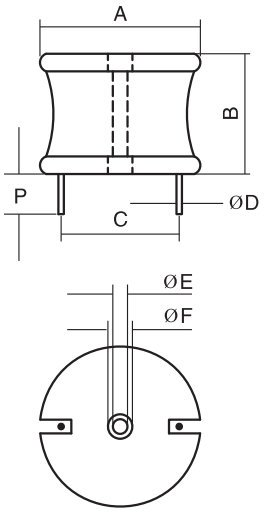

DIMENSIONS: inches/mm

A	B	P(min)	ØE	ØF
2.40/60.96	1.50/38.10	0.50/1270	0.10/2.54	0.25/6.35

ELECTRONICAL SCHEMATIC

TECHNICAL INFORMATION

The AIRD-05,06,07,08 Series of Power Line Choke is available in 367 standard values covering a wide rang of inductance and current. The use of high saturation flux density material make these coils ideal for use in switching regulated power supply applications and wherever high current choke values in a small physical size are needed.
Inductance Testing: ,HP4284A,HP4285A or equivalent
RDC:QuadTech 1880 Milliohmmeter
Rated Current L value drop10%typ.at IDC against its initial value
Temperature rise 40℃ Max Reference ambient temperature
Solderability: 75% of the lead wire shall be covered
Soldering Methods: Wave,Reflow
Operating Temperature:-25℃ to +85℃
Storage Temperature: -55℃ to +125℃
Terminal bending strength:24.5N Min
Moisture resistance:△L/L≤±10%

Note: All specifications subject to change without notice.

STANDARD SPECIFICATIONS

Part Number	L (μH) @1KHz	DCR (Ω Max)	IDC (A Max)	Dim C (Inches/mm) Approx.	Dim ØD (Inches/mm) Nom.
FAAIRD07-5R6M	5.6	0.0018	45.0	1.60/40.64	0.118/3.00
FAAIRD07-6R8M	6.8	0.0021	45.0	1.60/40.64	0.118/3.00
FAAIRD07-8R2M	8.2	0.0022	45.0	1.60/40.64	0.118/3.00
FAAIRD07-100k	10.0	0.0024	45.0	1.60/40.64	0.118/3.00
FAAIRD07-120K	12.0	0.0025	45.0	1.60/40.64	0.118/3.00
FAAIRD07-150K	15.0	0.0028	42.0	1.70/43.18	0.118/3.00
FAAIRD07-180K	18.0	0.0032	40.0	1.70/43.18	0.118/3.00
FAAIRD07-220K	22.0	0.0036	38.0	1.70/43.18	0.118/3.00
FAAIRD07-270K	27.0	0.0042	38.0	1.70/43.18	0.118/3.00
FAAIRD07-330K	33.0	0.0045	37.0	1.70/43.18	0.118/3.00
FAAIRD07-390K	39.0	0.0048	36.0	1.80/45.72	0.118/3.00
FAAIRD07-470K	47.0	0.0057	35.0	1.80/45.72	0.118/3.00
FAAIRD07-560K	56.0	0.0069	35.0	1.80/45.72	0.118/3.00
FAAIRD07-680K	68.0	0.0078	35.0	1.80/45.72	0.118/3.00
FAAIRD07-820K	82.0	0.0093	35.0	1.80/45.72	0.118/3.00
FAAIRD07-101K	100.0	0.0103	27.0	1.80/45.72	0.118/3.00
FAAIRD07-121K	120.0	0.0108	27.0	1.80/45.72	0.118/3.00
FAAIRD07-151K	150.0	0.0120	25.0	1.80/45.72	0.118/3.00
FAAIRD07-181K	180.0	0.0156	22.0	1.80/45.72	0.118/3.00
FAAIRD07-221K	220.0	0.0168	22.0	1.80/45.72	0.102/2.60
FAAIRD07-271K	270.0	0.0228	21.0	1.80/45.72	0.102/2.60
FAAIRD07-331K	330.0	0.0300	17.0	1.80/45.72	0.094/2.40
FAAIRD07-390K	390.0	0.0432	13.5	1.70/43.18	0.083/2.10
FAAIRD07-471K	470.0	0.0456	13.5	1.70/43.18	0.075/1.90
FAAIRD07-561K	560.0	0.0480	13.5	1.75/44.45	0.075/1.90
FAAIRD07-681K	680.0	0.0516	12.0	1.80/45.72	0.075/1.90
FAAIRD07-820K	820.0	0.0648	11.5	1.80/45.72	0.075/1.90
FAAIRD07-102K	1000.0	0.0936	10.0	1.75/44.45	0.067/1.70
FAAIRD07-122K	1200.0	0.1020	9.50	1.78/45.212	0.067/170
FAAIRD07-152K	1500.0	0.1176	8.00	1.80/45.72	0.067/170
FAAIRD07-182K	1800.0	0.1536	7.50	1.70/43.18	0.059/1.50
FAAIRD07-222K	2200.0	0.2160	7.20	1.70/43.18	0.055/1.40
FAAIRD07-272K	2700.0	0.2424	6.00	1.75/44.45	0.055/1.40
FAAIRD07-332K	3300.0	0.2640	5.50	1.80/45.72	0.055/1.40
FAAIRD07-392K	3900.0	0.3480	5.20	1.75/44.75	0.047/1.20
FAAIRD07-472K	4700.0	0.3924	5.00	1.78/45.212	0.047/1.20
FAAIRD07-562K	5600.0	0.4320	4.70	1.80/45.72	0.047/1.20
FAAIRD07-682K	6800.0	0.5940	4.50	1.70/43.18	0.043/1.10
FAAIRD07-822K	8200.0	0.6600	4.00	1.75/44.45	0.043/1.10
FAAIRD07-103K	10000.0	0.7560	4.00	1.80/45.72	0.043/1.10
FAAIRD07-123K	12000.0	0.9840	3.50	1.80/45.72	0.039/1.00
FAAIRD07-153K	15000.0	1.4160	2.80	1.75/44.45	0.035/0.90
FAAIRD07-183K	18000.0	1.5240	2.80	1.78/45.212	0.035/0.90
FAAIRD07-223K	22000.0	1.8000	2.30	1.80/45.72	0.035/0.90
FAAIRD07-273K	27000.0	2.3760	2.00	1.75/44.45	0.031/0.80
FAAIRD07-333K	33000.0	2.6400	1.90	1.80/45.72	0.031/0.80
FAAIRD07-393K	39000.0	3.5760	1.60	1.75/44.45	0.028/0.70
FAAIRD07-473K	47000.0	3.9360	1.60	1.78/45.212	0.028/0.70
FAAIRD07-563K	56000.0	4.3200	1.50	1.80/45.72	0.028/0.70
FAAIRD07-683K	68000.0	5.2200	1.30	1.85/46.99	0.028/0.70

Note:1. K=±10%,M=±20%

RADIAL LEADED POWER LINE CHOKES FAAIRD08 SERIES

FEATURES:

High Saturation Material
Polyolefin Shrink Tubing
Low DC Resistance
High Reliability Low cost

OPTIONS:

Packaging: Tape & Reel is Standard (Qty: 1000 pcs)
Bulk packaging available for smaller quantities
Tolerance:10% is standard
tighter tolerances available.

COMMON APPLICATIONS:

Switching Regulators
RFI Suppression Filters
Power Amplifiers
Power Supplies
SCR and Trica Controls
Speaker Crossover Networks
Automotive Systems
Filters

PHYSICAL CHARACTERISTICS

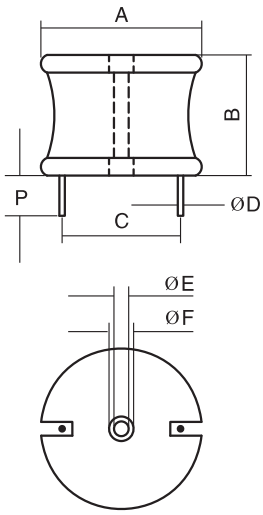

DIMENSIONS: inches/mm

A	B	P(min)	ØE	ØF
2.40/60.96	2.50/63.50	0.50/1270	0.10/2.54	0.25/6.35

ELECTRONICAL SCHEMATIC

TECHNICAL INFORMATION

The AIRD-05,06,07,08 Series of Power Line Choke is available in 367 standard values covering a wide rang of inductance and current. The use of high saturation flux density material make these coils ideal for use in switching regulated power supply applications and wherever high current choke values in a small physical size are needed.
Inductance Testing: ,HP4284A,HP4285A or equivalent
RDC:QuadTech 1880 Milliohmmeter
Rated Current L value drop10%typ.at IDC against its initial value
Temperature rise 40℃ Max Reference ambient temperature
Solderability: 75% of the lead wire shall be covered
Soldering Methods: Wave,Reflow
Operating Temperature:-25℃ to +85℃
Storage Temperature: -55℃ to +125℃
Terminal bending strength:24.5N Min
Moisture resistance:△L/L≤±10%

Note: All specifications subject to change without notice.

STANDARD SPECIFICATIONS

Part Number	L (μH) @1KHz	DCR (Ω Max)	IDC (A Max)	Dim C (Inches/mm) Approx.	Dim ØD (Inches/mm) Nom.
FAAIRD08-5R6M	5.6	0.0012	55.0	*	0.224/5.70
FAAIRD08-6R8M	6.8	0.0013	55.0	*	0.224/5.70
FAAIRD08-8R2M	8.2	0.0015	55.0	*	0.224/5.70
FAAIRD08-100K	10.0	0.0017	55.0	*	0.224/5.70
FAAIRD08-120K	12.0	0.0020	55.0	*	0.224/5.70
FAAIRD08-150K	15.0	0.0021	55.0	*	0.224/5.70
FAAIRD08-180K	18.0	0.0023	55.0	*	0.224/5.70
FAAIRD08-220K	22.0	0.0025	55.0	*	0.224/5.70
FAAIRD08-270K	27.0	0.0026	55.0	*	0.224/5.70
FAAIRD08-330K	33.0	0.0029	55.0	*	0.224/5.70
FAAIRD08-390K	39.0	0.0033	55.0	*	0.224/5.70
FAAIRD08-470K	47.0	0.0035	55.0	*	0.224/5.70
FAAIRD08-560K	56.0	0.0039	55.0	*	0.224/5.70
FAAIRD08-680K	68.0	0.0043	50.0	*	0.224/5.70
FAAIRD08-820K	82.0	0.0048	45.0	*	0.209/5.30
FAAIRD08-101K	100.0	0.0052	40.0	*	0.209/5.30
FAAIRD08-121K	120.0	0.0071	39.0	*	0.209/5.30
FAAIRD08-151K	150.0	0.0079	38.0	*	0.209/5.30
FAAIRD08-181K	180.0	0.0087	37.0	*	0.209/5.30
FAAIRD08-221K	220.0	0.0120	33.0	*	0.189/4.80
FAAIRD08-271K	270.0	0.0140	30.0	*	0.189/4.80
FAAIRD08-331K	330.0	0.0180	27.0	1.80/45.72	0.118/3.00
FAAIRD08-390K	390.0	0.0200	25.0	1.70/43.18	0.118/3.00
FAAIRD08-471K	470.0	0.0280	21.0	1.70/43.18	0.102/2.15
FAAIRD08-561K	560.0	0.0310	20.0	1.45/44.45	0.102/2.15
FAAIRD08-681K	680.0	0.034	19.0	1.80/45.72	0.102/2.15
FAAIRD08-820K	820.0	0.047	16.0	1.80/45.72	0.094/2.40
FAAIRD08-102K	1000.0	0.052	15.5	1.75/44.45	0.094/2.40
FAAIRD08-122K	1200.0	0.057	15	1.78/45.212	0.094/2.40
FAAIRD08-152K	1500.0	0.080	13.0	1.80/45.72	0.079/2.00
FAAIRD08-182K	1800.0	0.088	12.0	1.70/43.18	0.079/2.00
FAAIRD08-222K	2200.0	0.122	10.0	1.70/43.18	0.075/1.90
FAAIRD08-272K	2700.0	0.135	10.0	1.75/44.45	0.075/1.90
FAAIRD08-332K	3300.0	0.188	8.0	1.80/45.72	0.067/1.70
FAAIRD08-392K	3900.0	0.205	8.0	1.75/44.45	0.067/1.70
FAAIRD08-472K	4700.0	0.283	6.7	1.78/45.212	0.059/1.50
FAAIRD08-562K	5600.0	0.309	6.4	1.80/45.72	0.059/1.50
FAAIRD08-682K	6800.0	0.431	5.4	1.70/43.18	0.055/1.40
FAAIRD08-822K	8200.0	0.472	5.2	1.75/44.45	0.055/1.40
FAAIRD08-103K	10000.0	0.521	5.0	1.80/45.72	0.055/1.40
FAAIRD08-123K	12000.0	0.717	4.2	1.80/45.72	0.047/1.20
FAAIRD08-153K	15000.0	0.803	4.0	1.75/44.45	0.047/1.20
FAAIRD08-183K	18000.0	1.111	3.4	1.78/45.212	0.043/1.10
FAAIRD08-223K	22000.0	1.228	3.2	1.80/45.72	0.043/1.10
FAAIRD08-273K	27000.0	1.716	2.7	1.75/44.45	0.039/1.00
FAAIRD08-333K	33000.0	1.896	2.6	1.80/45.72	0.039/1.00
FAAIRD08-393K	39000.0	2.590	2.3	1.75/44.45	0.035/0.90
FAAIRD08-473K	47000.0	2.840	2.2	1.78/45.212	0.035/0.90
FAAIRD08-563K	56000.0	3.104	2.1	1.80/45.72	0.035/0.90
FAAIRD08-683K	68000.0	4.331	1.7	1.85/46.99	0.031/0.80
FAAIRD08-823K	82000.0	4.756	1.6	1.90/48.26	0.031/0.80
FAAIRD08-104K	100000.0	6.652	1.4	1.95/49.53	0.028/0.70

* Inductors wound with 2 standards of wire. Consult Engineering for dimension. K=±10%,M=±20%